Rev.	Revision Text	Rev.date	Rev.by	Ignr. date	Ignr. by
02	general simplification	2023-12-14	Rasbond	2023-12-19	McNaeb

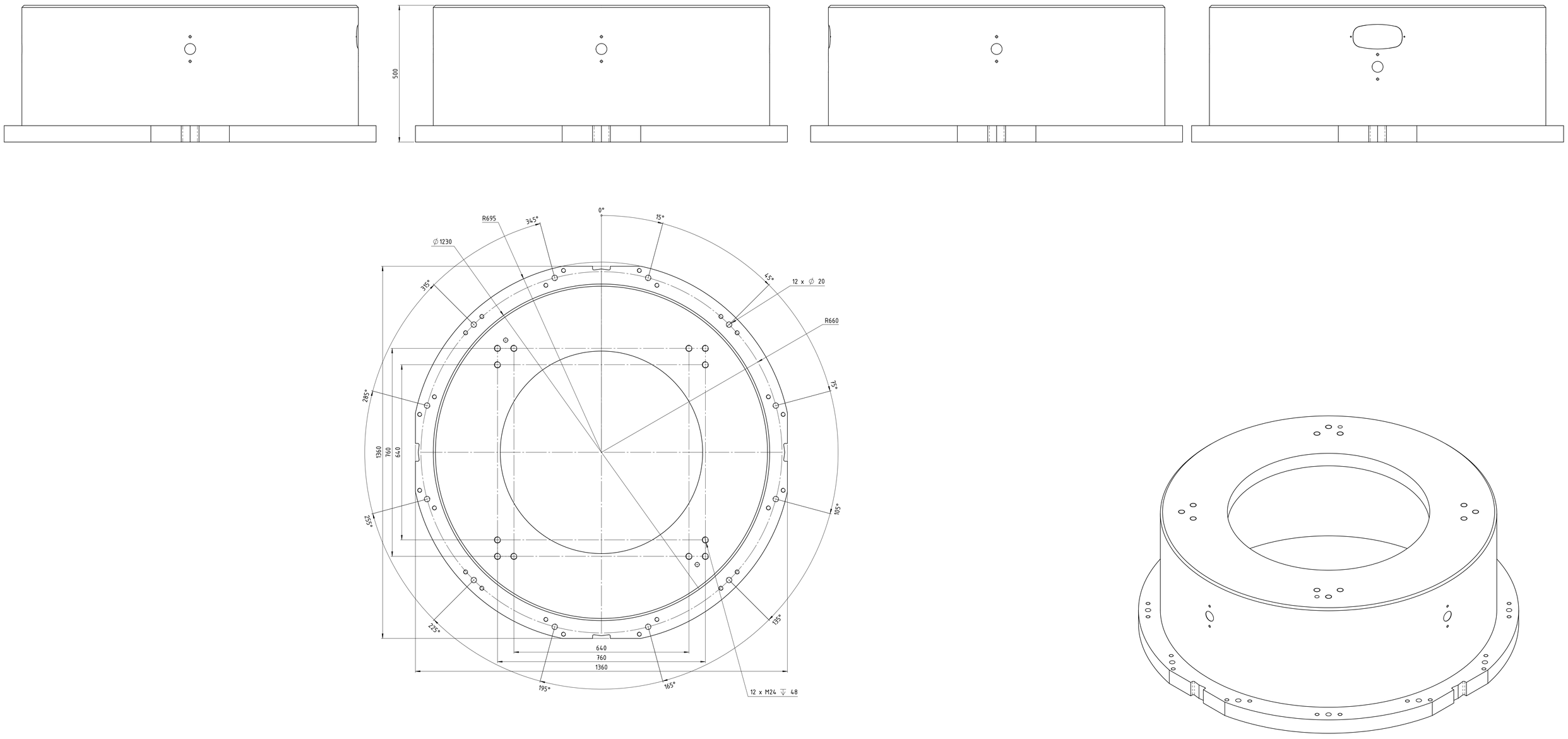

The reproduction, distribution and utilization of this document as well as the communication of its contents to others without express authorization is prohibited. Offenders will be held liable for the payment of damages. All rights reserved in the event of the grant of a patent, utility model or design.

Status: Released		YASKAWA www.yaskawa.eu.com	dimension:
SAP EMEA no:	SAP AM no: 230794		weight: 546,891 kg
Title / description: robot stand T-500			created: 2023-07-19 McNaeb
			drawn: 2023-07-19 McNaeb
			approved: 2023-07-19 RaiSeid
			sheet: A0
			drawing-no.: 0001060821-100
			revision: 02
			15 / 4/5