Rev.	Revision Text	Rev.date	Rev.by	agrv. date	agrv. by
02	general simplification	2023-12-14	RaSaid	2023-12-19	McNaeb

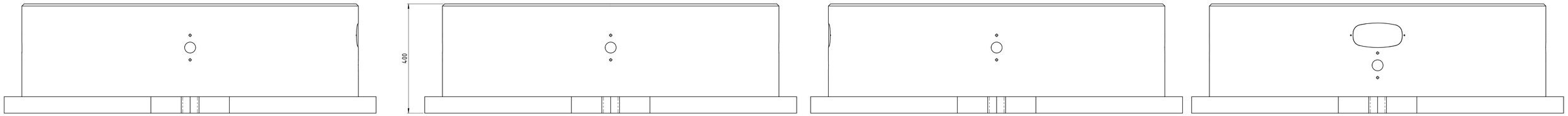

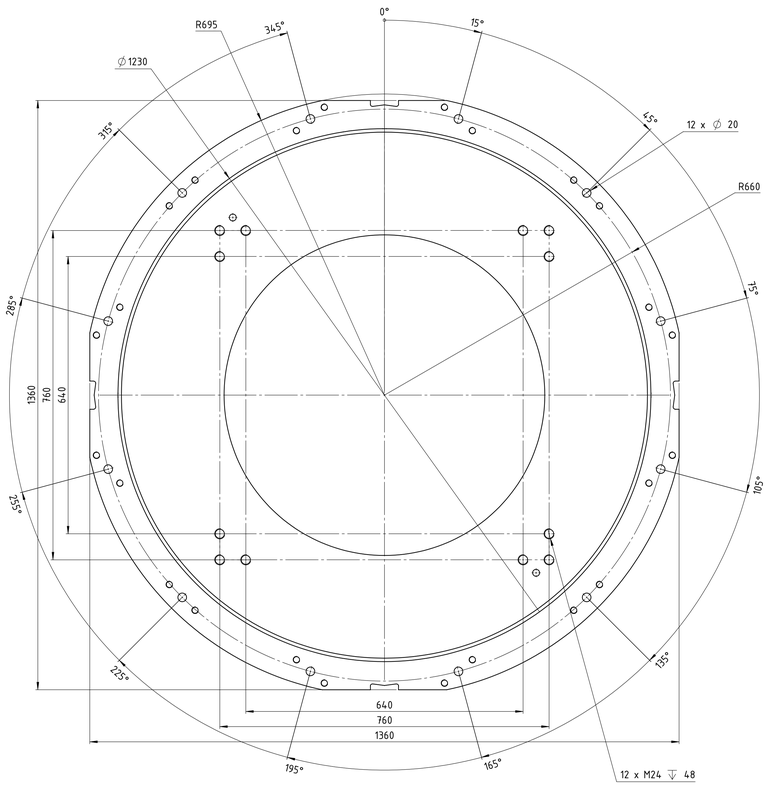

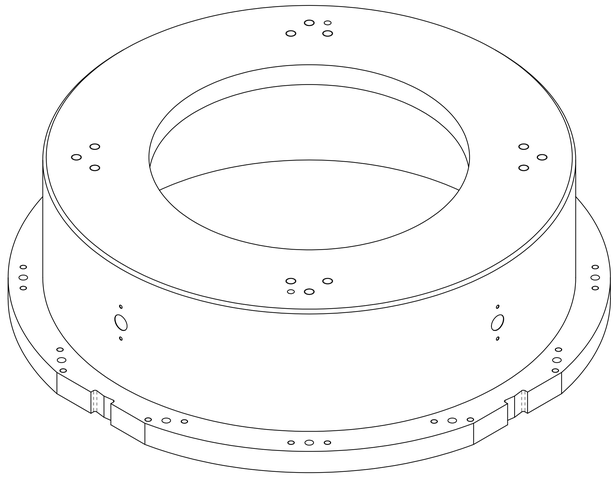

Status: Released		YASKAWA www.yaskawa.eu.com	
SAP EMEA no:	SAP AM no: 1230793		
title / description: robot stand T-400			

dimension:		weight: 528.9 kg	
created:	2023-07-19	McNaeb	C3
drawn:	2023-07-19	McNaeb	sheet:
approved:	2023-07-19	RaSaid	A0
drawing-no.: 0001060832-100		revision: 02	15 / 4/5

where nothing else is indicated
tolerances: DIN ISO 2768-mH
welding: DIN EN ISO 17920-A
no sharp edges

The reproduction, distribution and utilization of this document as well as the communication of its contents to others without express authorization is prohibited. Offenders will be held liable for the payment of damages. All rights reserved in the event of the grant of a patent, utility model or design.